Support foot for PHBE

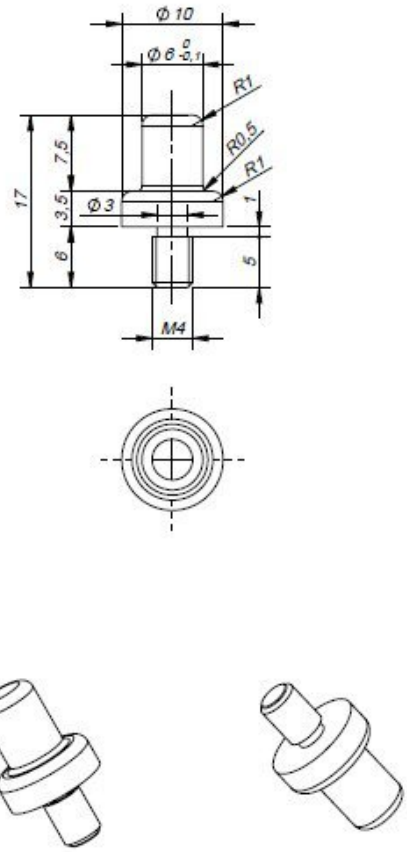

Item no.	WL92342
Manufacturer	JBC
Manufacturer article no.	0014227
GPSR manufacturer data	JBC Soldering SL Ramón y Cajal 3 ES-08750 Molins De Rei www.jbctools.com
Sales unit	1 piece
Content unit	1 piece
ESD compliant	yes