Chisel-shaped desoldering tip C120 for PA120 soldering tweezers

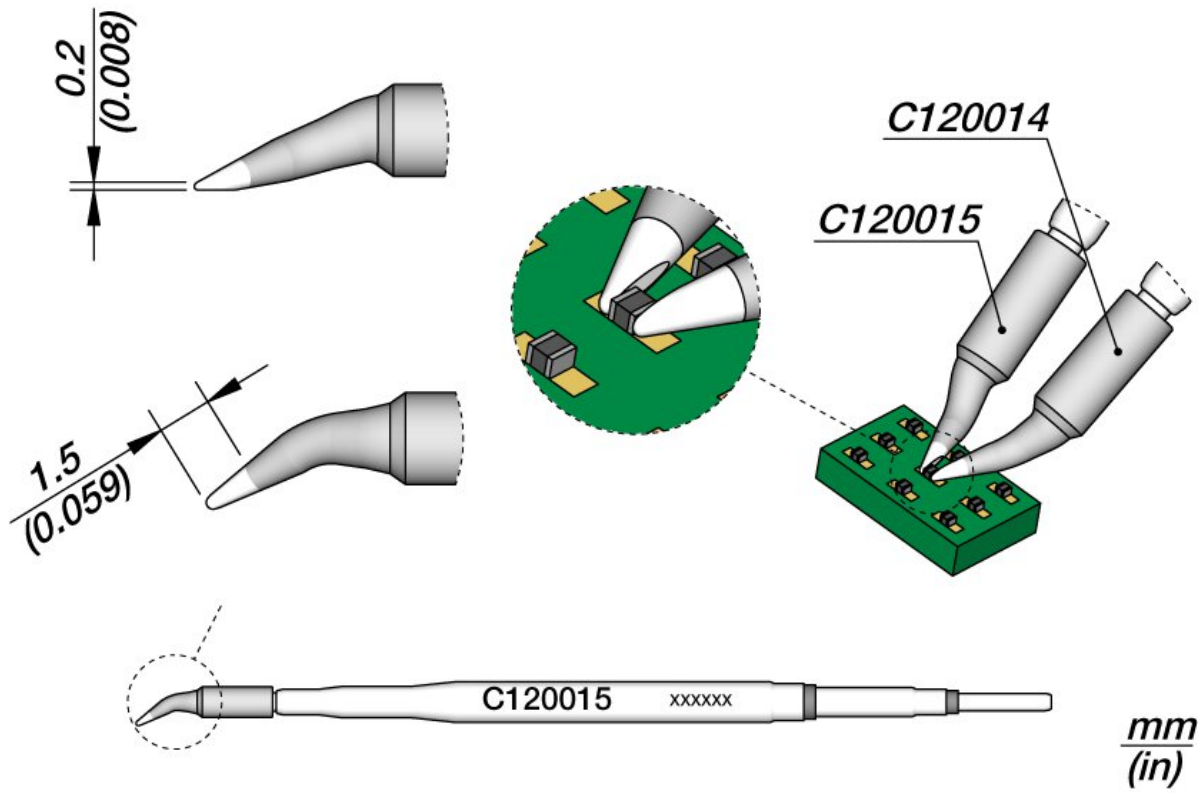

This soldering tip has been specially developed to maximize the contact of the tip with chip components from 0402 to 1206.
C120 soldering tips are suitable for easy soldering and desoldering of chip components or dual in-line components, thus reducing processing time.
They work with micro-tweezers that allow the soldering tips to be aligned according to the user's needs.
JBC Long Life tips offer instant heat-up, excellent heat transfer and high durability.
Thanks to the JBC Most Efficient Soldering System and Sleep & Hibernation features, they last five times longer than other brands.

Item no.	**WL92093**
Manufacturer	JBC
Manufacturer article no.	C120015

GPSR manufacturer data	JBC Soldering SL Ramón y Cajal 3 ES-08750 Molins De Rei www.jbctools.com
Length	110 mm
Width	12 mm
Height	12 mm
Sales unit	1 piece
Content unit	1 piece
ESD compliant	no