Cartridge chisel 2.9 X 0.7, C210039

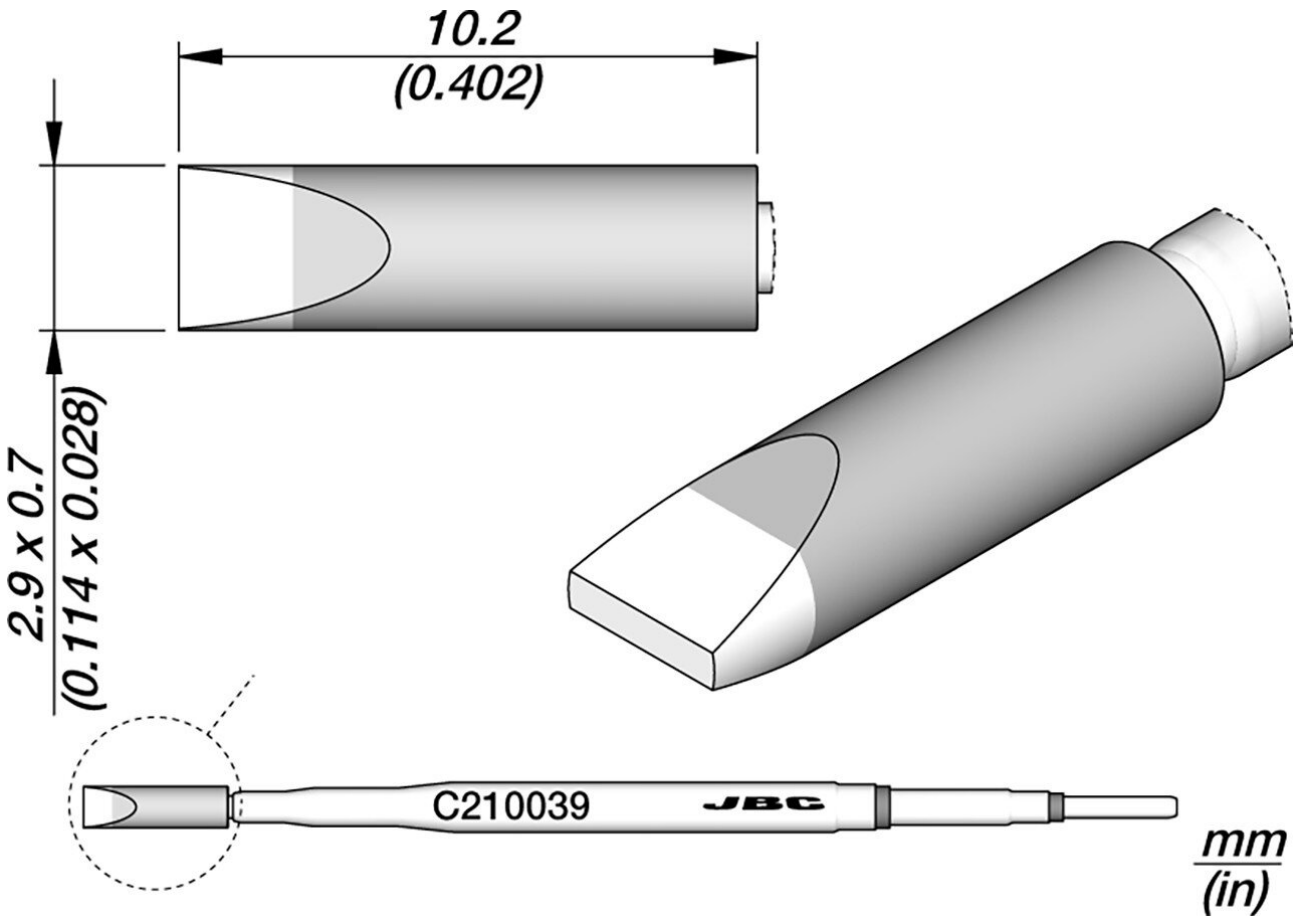

The C210 cartridges are suitable for precision soldering work with medium power requirements.
Due to their size, these cartridges are perfect for working with SMD, under the microscope or with conventional components.
They work with the T210 precision handle.
JBC Long Life Tips offer instant heat-up, excellent heat transfer and long shelf life.
Thanks to the JBC Most Efficient Soldering System and Sleep & Hibernation functions, they last 5 times longer than other brands.

- The C210 cartridges are suitable for precision soldering work with medium power requirements
- They work with the T210 precision handle
- Weight: 0.002 kg
- Packaging: 110 x 12 x 12 mm / 0.02 kg

Item no.	WL80503
Model	C210039
Manufacturer	JBC
Manufacturer article no.	C210039
GPSR manufacturer data	JBC Soldering SL Ramón y Cajal 3 ES-08750 Molins De Rei www.jbctools.com
Length with packaging	110 mm
Width with packaging	12 mm
Height with packaging	12 mm
Sales unit	1 piece
Content unit	1 piece
Product series	C210
Tip series	C210
Tip dimensions	2,9x0,7
Tip length	10.2 mm
Tip thickness	2.9 mm
Tip shape	chisel-shaped
Tip alignment	straight
Matching handpiece	T210
ESD compliant	no