Soldering tip T37-BC70105, beveled

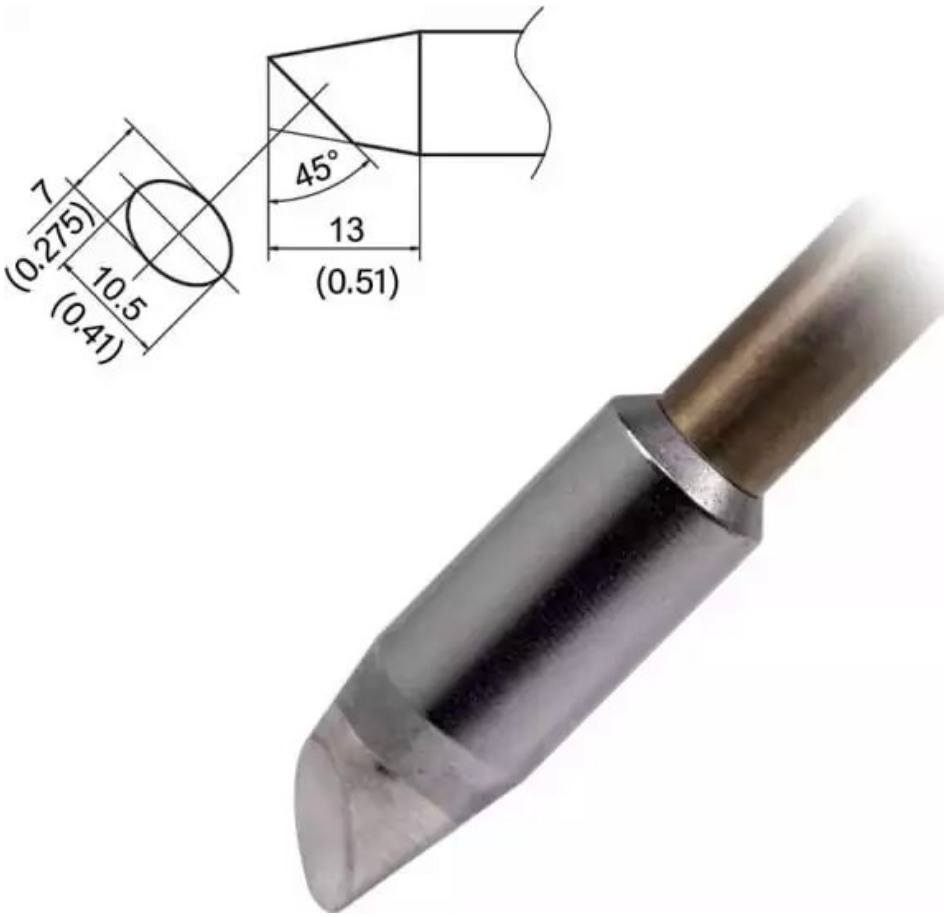

- Tip shape: beveled
- Diameter: 7.0 mm

Item no.	**WL75404**
Manufacturer	HAKKO
Manufacturer article no.	T37-BC70105
GPSR manufacturer data	TBK - Technisches Büro Kullik GmbH Industriestrasse 27 DE-56276 Großmaischeid www.kullik.com/
Length	13 mm
Width	7 mm
Height	7 mm

Sales unit	1 piece
Content unit	1 piece
Colour	grey
ESD compliant	no