Soldering tip format 4C

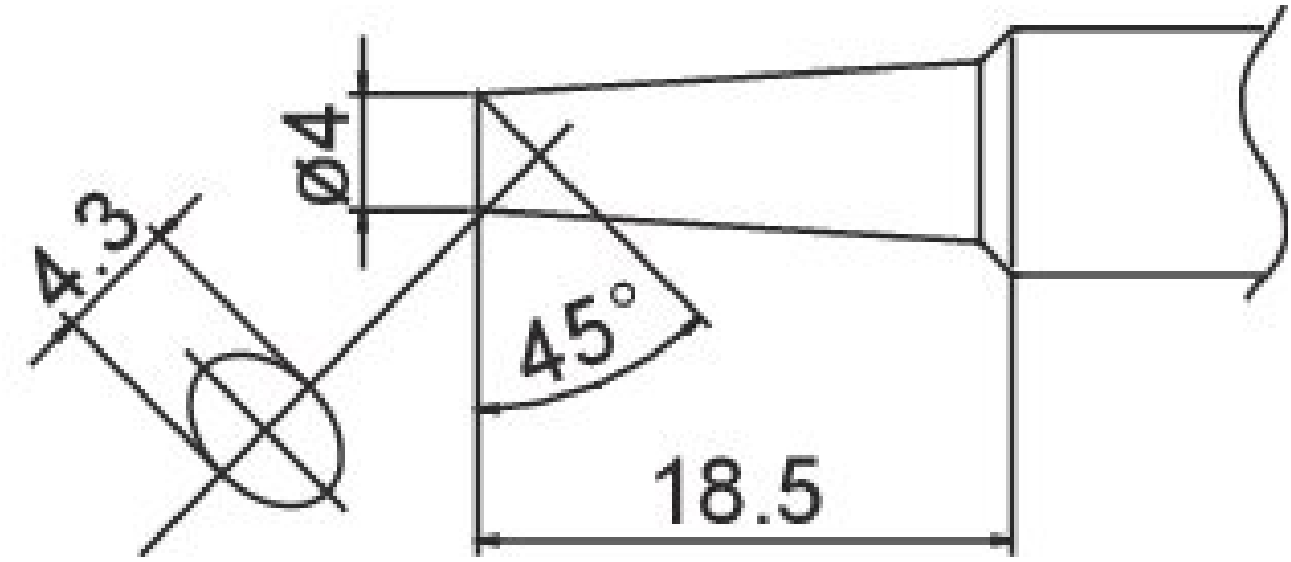

• for HAKKO soldering irons 908 / 914 / 952 / FX 8805

Item no.	**WL74946**
Manufacturer	HAKKO
Manufacturer article no.	T19-C4
GPSR manufacturer data	TBK - Technisches Büro Kullik GmbH Industriestrasse 27 DE-56276 Großmaischeid www.kullik.com/
Length	125 mm
Width	48 mm
Height	10 mm
Sales unit	1 piece
Content unit	1 piece
Tip series	T19
ESD compliant	no