COMPOSIT soldering tip 450°C format 0.8D

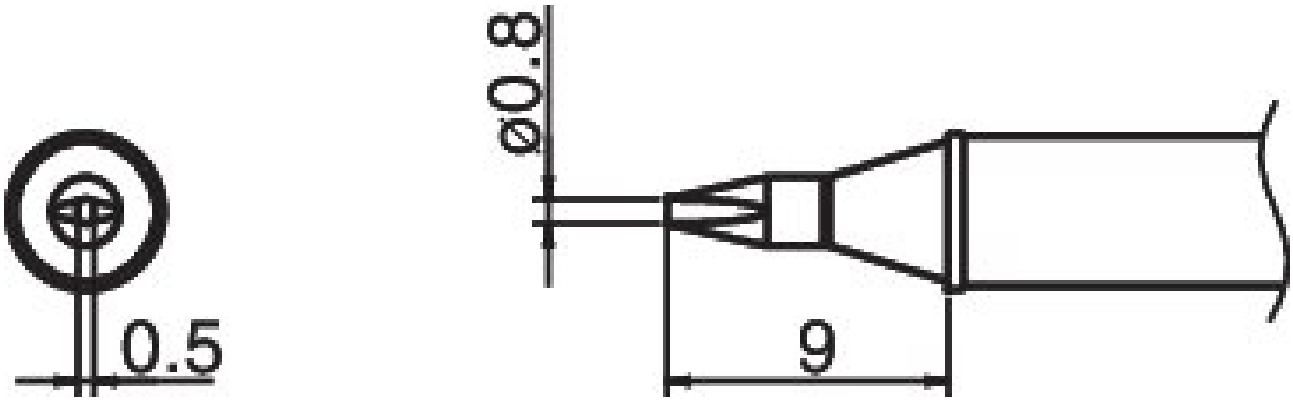

• for HAKKO soldering iron FX 1001

Item no.	**WL74913**
Manufacturer	HAKKO
Manufacturer article no.	T31B-01D08
GPSR manufacturer data	TBK - Technisches Büro Kullik GmbH Industriestrasse 27 DE-56276 Großmaischeid www.kullik.com/
Length	220 mm
Width	45 mm
Height	6 mm
Sales unit	1 piece
Content unit	1 piece
Tip series	T31
ESD compliant	no