Soldering tip format 1BC

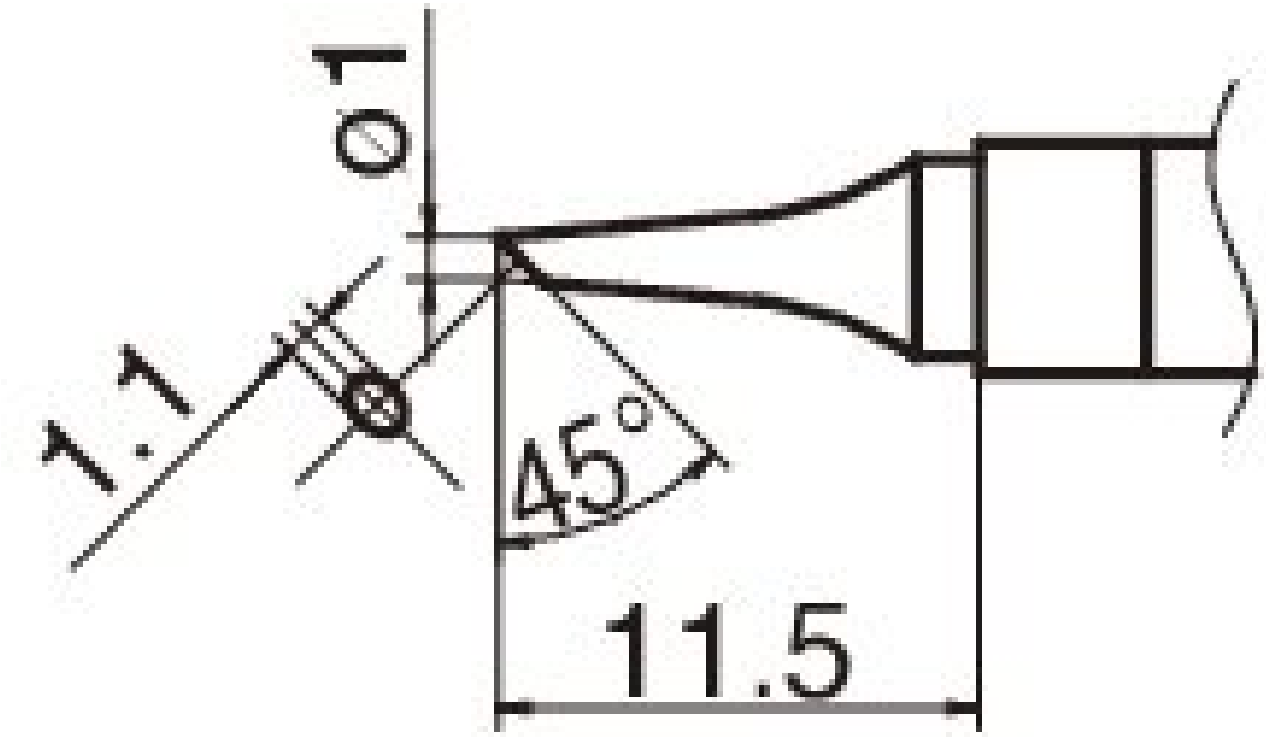

• for HAKKO IoT soldering iron FN 1101 / FN 1102 (nozzle C - B 5235)

Item no.	**WL74846**
Manufacturer	HAKKO
Manufacturer article no.	T36-BC1
GPSR manufacturer data	TBK - Technisches Büro Kullik GmbH Industriestrasse 27 DE-56276 Großmaischeid www.kullik.com/
Length	220 mm
Width	45 mm
Height	6 mm
Sales unit	1 piece
Content unit	1 piece
Tip series	T36

ESD compliant	no