Soldering tip Format 2.4D

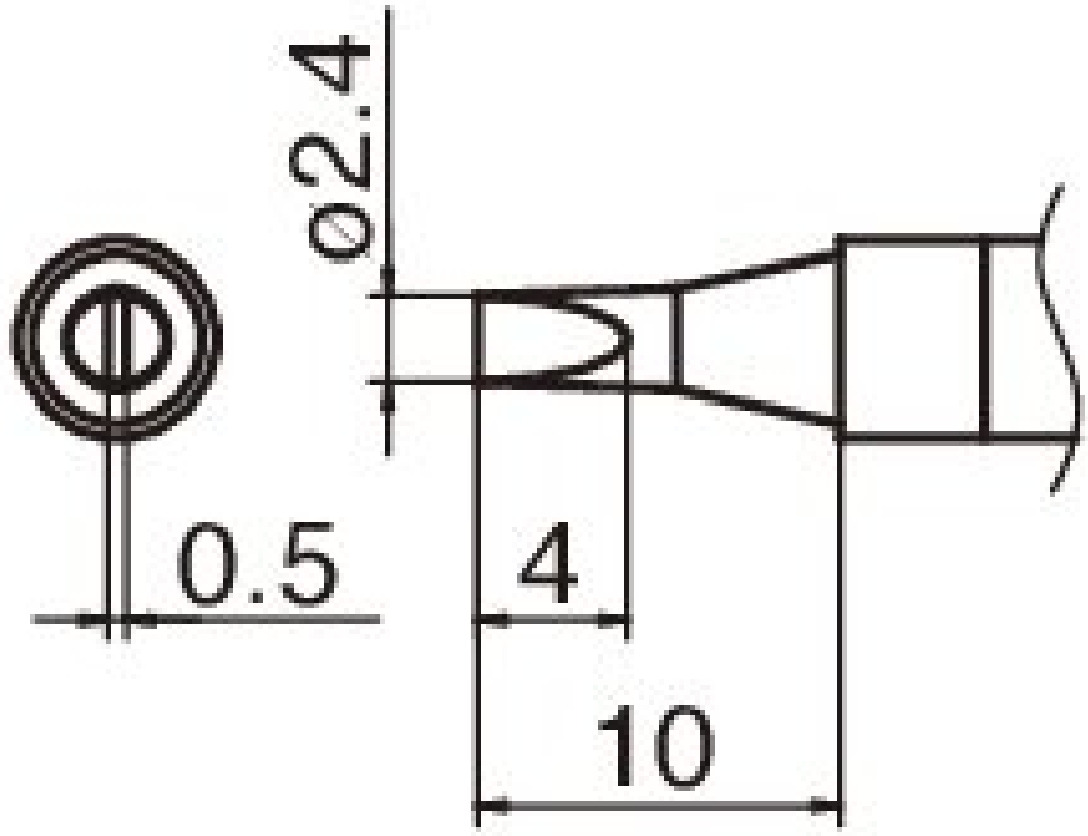

• for HAKKO IoT soldering iron FN 1101 / FN 1102 (nozzle A - B 5233)

Item no.	**WL74838**
Manufacturer	HAKKO
Manufacturer article no.	T36-D24
GPSR manufacturer data	TBK - Technisches Büro Kullik GmbH Industriestrasse 27 DE-56276 Großmaischeid www.kullik.com/
Length	220 mm
Width	45 mm
Height	6 mm

Sales unit	1 piece
Content unit	1 piece
Tip series	T36
ESD compliant	no