Active soldering tip format 0.5B

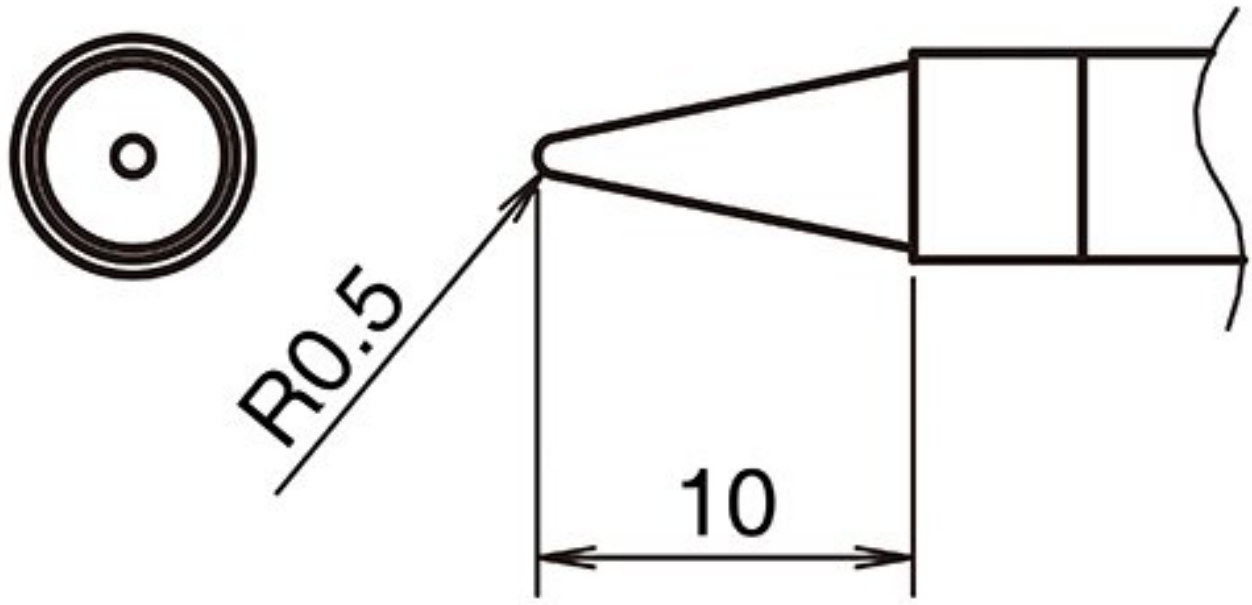

• for HAKKO soldering iron FX 9701 and HAKKO N2 soldering iron FX 9702 (nozzle G - B 5296)

Item no.	**WL74369**
Manufacturer	HAKKO
Manufacturer article no.	T39-B05
GPSR manufacturer data	TBK - Technisches Büro Kullik GmbH Industriestrasse 27 DE-56276 Großmaischeid www.kullik.com/
Length	10 mm
Width	0.5 mm
Sales unit	1 piece
Content unit	1 piece
Tip series	T39
Tip shape	conical
Tip alignment	straight
Matching handpiece	FX-9702

ESD compliant	no