Active soldering tip Format 5.2DS

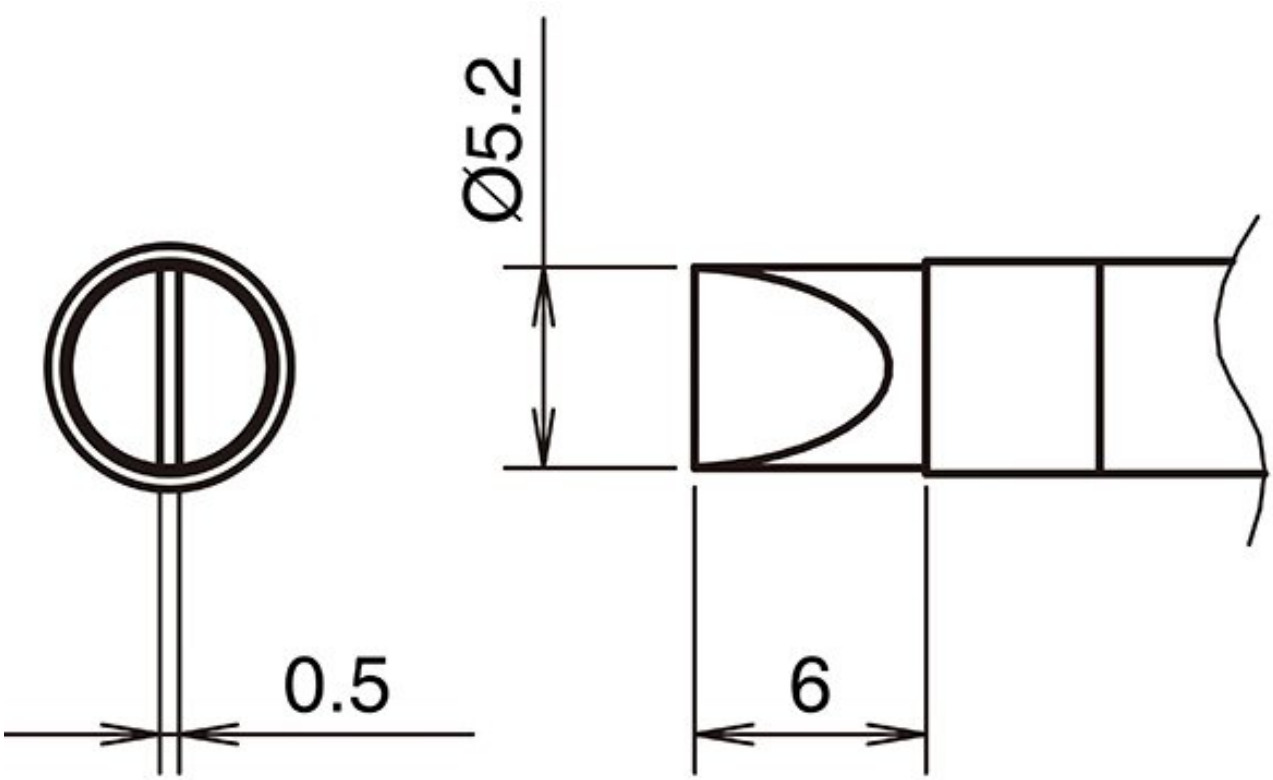

• for HAKKO soldering iron FX 9701 and HAKKO N2 soldering iron FX 9702 (nozzle C - B 5292)

Item no.	**WL74321**
Manufacturer	HAKKO
Manufacturer article no.	T39-DS52
GPSR manufacturer data	TBK - Technisches Büro Kullik GmbH Industriestrasse 27 DE-56276 Großmaischeid www.kullik.com/
Length	6 mm
Width	5.2 mm
Height	0.5 mm
Sales unit	1 piece
Content unit	1 piece

Tip series	T39
Tip shape	chisel-shaped
Tip alignment	straight
Matching handpiece	FX-9702
ESD compliant	no