Active soldering tip size 0.8JD

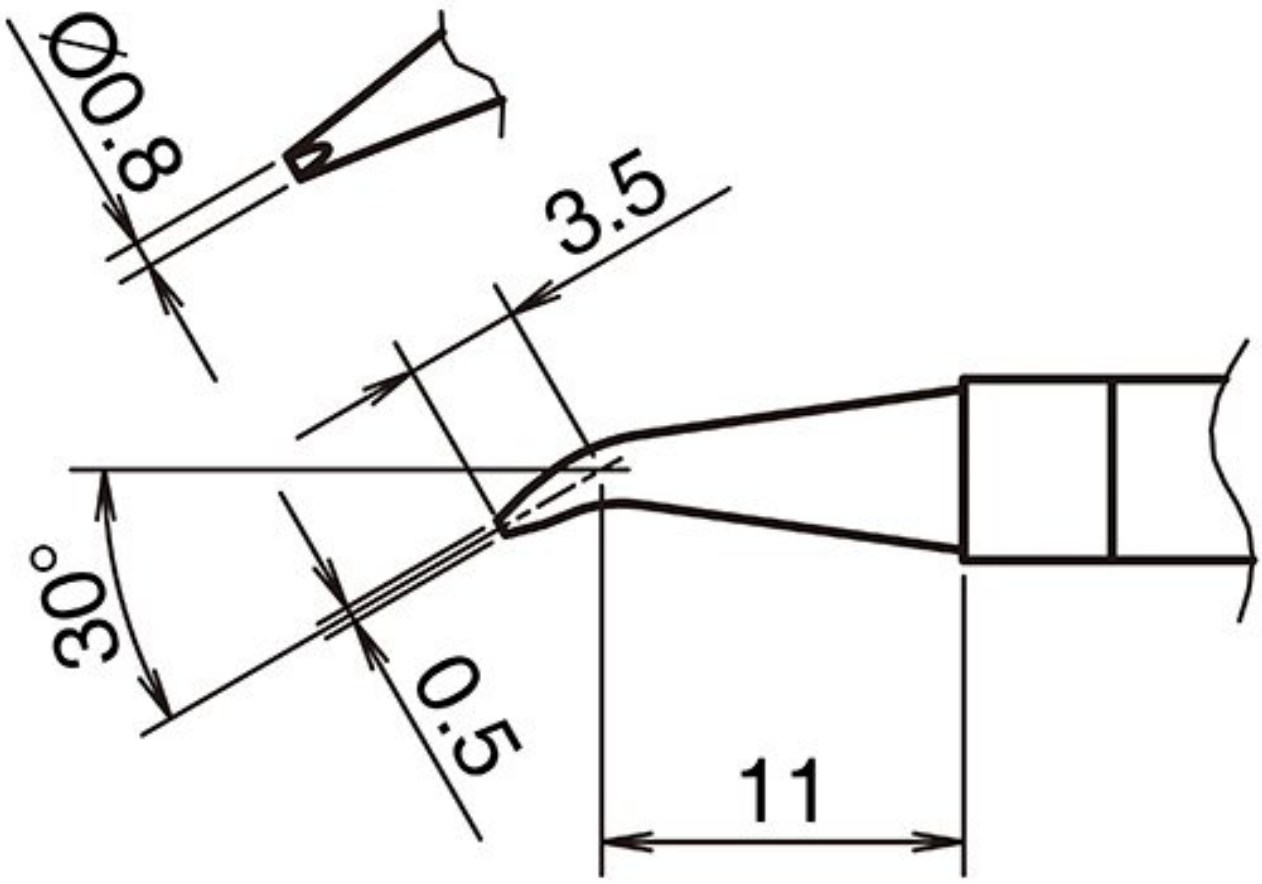

• for HAKKO soldering iron FX 9701

Item no.	**WL74316**
Manufacturer	HAKKO
Manufacturer article no.	T39-JD08
GPSR manufacturer data	TBK - Technisches Büro Kullik GmbH Industriestrasse 27 DE-56276 Großmaischeid www.kullik.com/
Length	14.5 mm
Width	0.8 mm
Height	0.5 mm
Sales unit	1 piece

Content unit	1 piece
Tip series	T39
Tip shape	conical
Tip alignment	bent
Matching handpiece	FX-971
ESD compliant	no