Active soldering tip Format KU

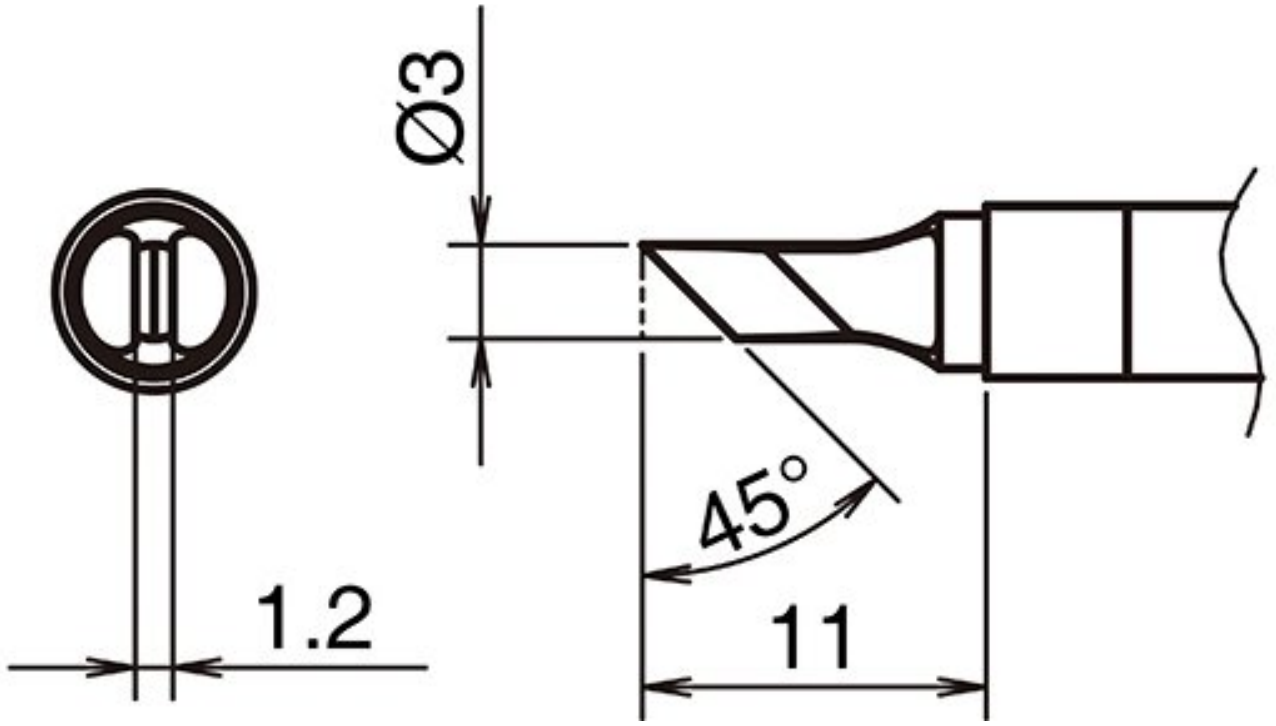

• for HAKKO soldering iron FX 9701 and HAKKO N2 soldering iron FX 9702 (nozzle F - B 5295)

Item no.	**WL74307**
Manufacturer	HAKKO
Manufacturer article no.	T39-KU
GPSR manufacturer data	TBK - Technisches Büro Kullik GmbH Industriestrasse 27 DE-56276 Großmaischeid www.kullik.com/
Length	11 mm
Width	1.2 mm
Height	3 mm
Sales unit	1 piece
Content unit	1 piece
Tip series	T39

Tip shape	knife-shaped
Tip alignment	sloped
Matching handpiece	FX-9702
ESD compliant	no