Soldering tip R245, pin connector, Ø 1.5 mm, R245010

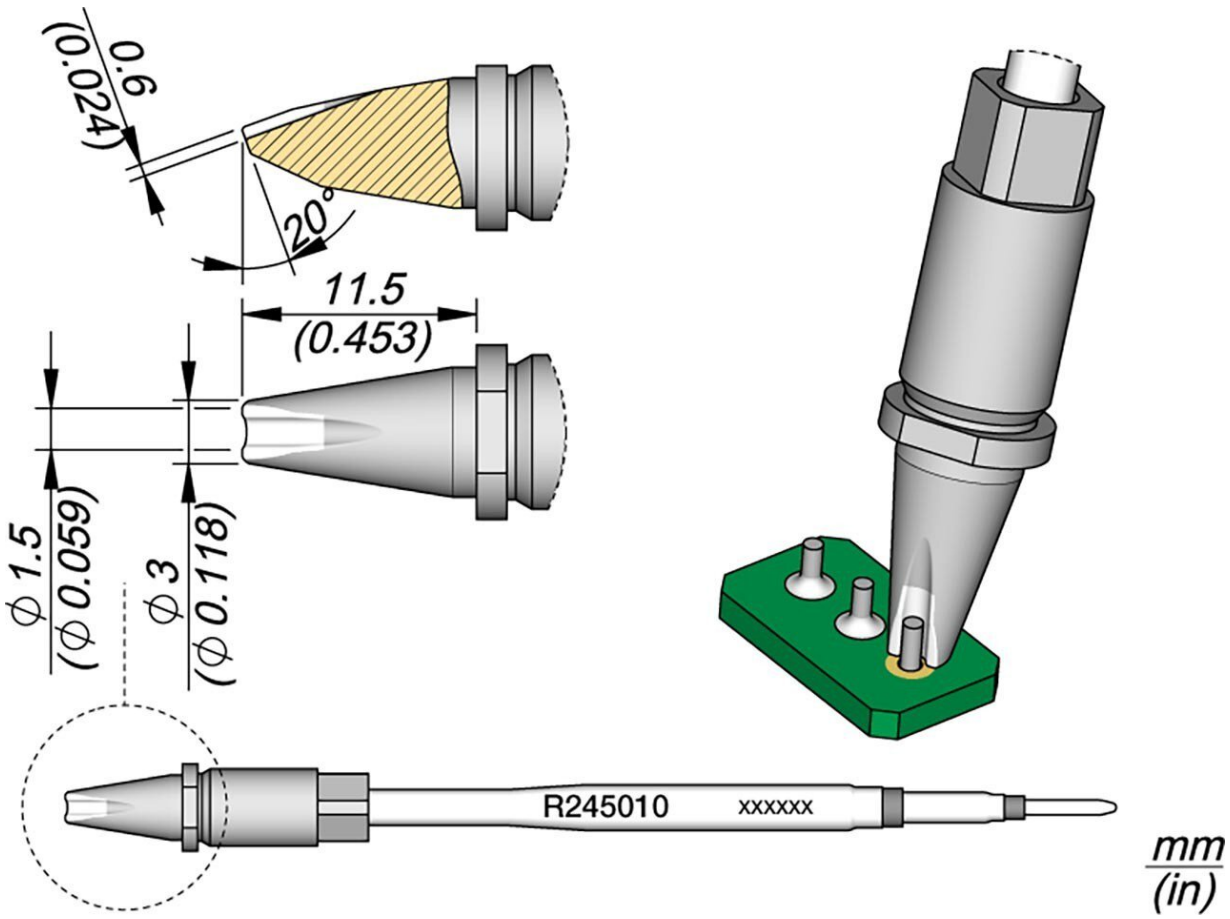

• for automated processes
• for standard soldering applications
• Design includes a square cross section that perfectly centers the soldering tip into the soldering iron and ensures precise vertical positioning
• due to this square cross-section the soldering tip can be inserted in 4 different positions, which can be changed in 90° steps
• replaces R245004

Item no.	**WL47202**
Model	R245-010
Manufacturer	JBC
Manufacturer article no.	R245010
GPSR manufacturer data	JBC Soldering SL

	Ramón y Cajal 3 ES-08750 Molins De Rei www.jbctools.com
Length with packaging	183 mm
Width with packaging	60 mm
Height with packaging	34 mm
Sales unit	1 piece
Content unit	1 piece
Product series	R245
Matching stand	CS2R245
Soldering tip or desoldering tip	soldering tip
Tip series	R245
Angle (soldering tip)	20 °
Outer diameter	3 mm
Tip dimensions	Ø 1,5 x 0,6 mm
Tip length	11.5 mm
Tip thickness	0.6 mm
Soldering tip diameter	1.5 mm
Tip applications	Through-hole I Cable soldering
Tip shape	round
Tip alignment	straight
Matching handpiece	TR245, TRA245
ESD compliant	no