Universal tripod mount kit, 25-50 mm

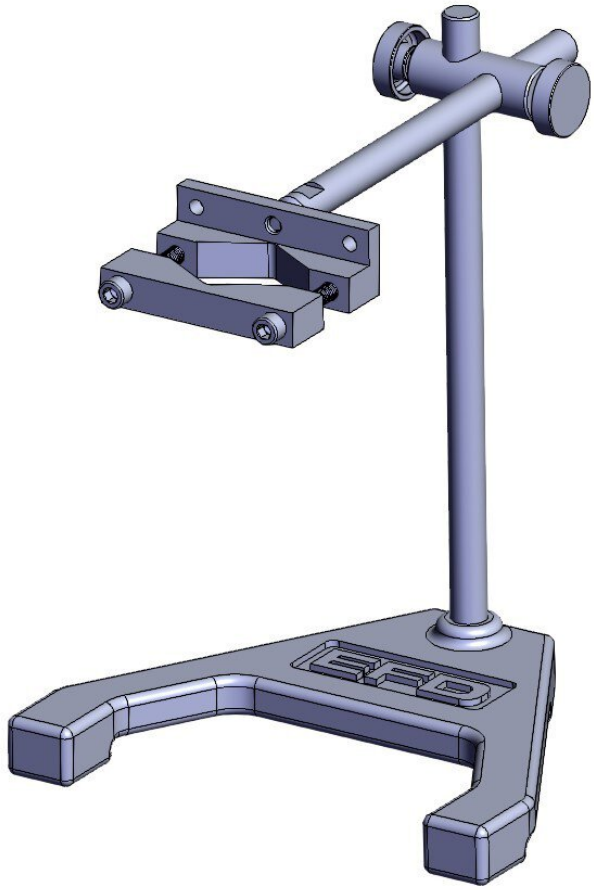

Optional stand mount (P/N 7015875) enables operators to maneuver the work piece with hands-free dispense

Item no.	**WL46876**
Model	7015875
Manufacturer	NORDSON EFD
Manufacturer article no.	7015875
GPSR manufacturer data	Nordson Deutschland GmbH Kapellenstraße 12 DE-85622 Feldkirchen www.nordson.com
Sales unit	1 piece
Content unit	1 piece

ESD compliant	no