Soldering tip R245, pin connector, Ø 1.5 mm, R245004

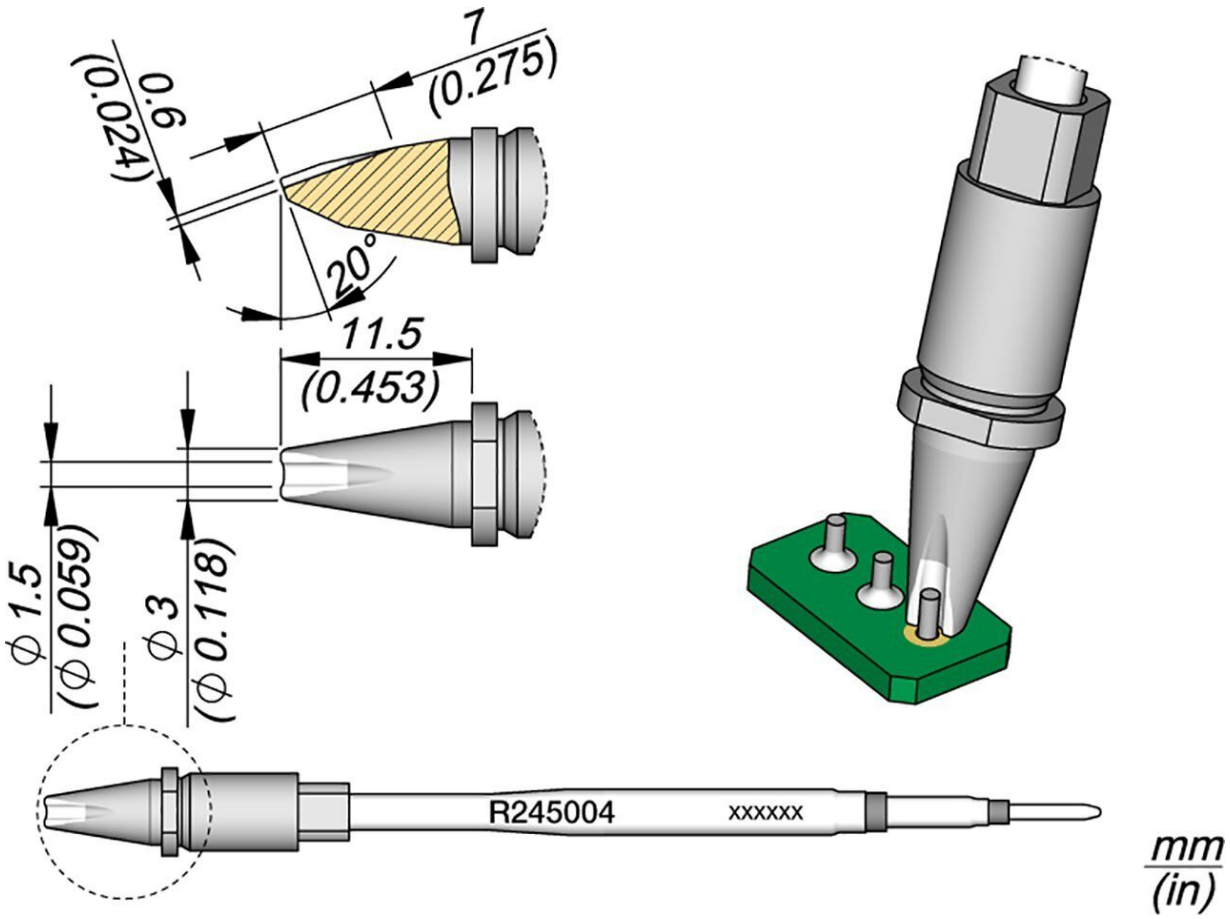

• for automated processes
• for standard soldering applications
• Design incorporates a square cross-section that perfectly centers the soldering tip into the soldering irons and ensures precise vertical positioning
• this square cross section allows the soldering tip to be inserted in 4 different positions, which can be changed in 90° steps

Item no.	**WL43422**
Model	R245-004
Manufacturer	JBC
Manufacturer article no.	R245004
GPSR manufacturer data	JBC Soldering SL Ramón y Cajal 3

	ES-08750 Molins De Rei www.jbctools.com
Sales unit	1 piece
Content unit	1 piece
Product series	R245
Matching stand	CS2R245
Soldering tip or desoldering tip	soldering tip
Tip series	R245
Angle (soldering tip)	20 °
Outer diameter	3 mm
Tip dimensions	Ø 1,5 x 0,6 mm
Tip length	11.5 mm
Tip thickness	0.6 mm
Soldering tip diameter	1.5 mm
Tip applications	Through-hole I Cable soldering
Tip shape	round
Tip alignment	sloped
Matching handpiece	TR245, TRA245
ESD compliant	no