Wire feed ring for AL-2A

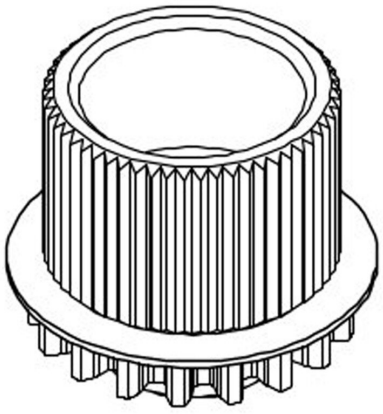

The wire feed collar for AL-2A from JBC is an indispensable accessory for precise welding work. Developed for professional use, this feed collar ensures a consistent and reliable wire feed, leading to optimum welding results. Thanks to its robust construction, the wire feed collar offers a long service life and is ideal for use in demanding working environments. Easy installation and maintenance make it a practical choice for professionals who value efficiency and quality.

Item no.	**WL41701**
Model	0002537
Manufacturer	JBC
Manufacturer article no.	0002537
GPSR manufacturer data	JBC Soldering SL Ramón y Cajal 3

	ES-08750 Molins De Rei www.jbctools.com
Sales unit	1 piece
Content unit	1 piece
ESD compliant	no