Soldering tip for chip, bevelled 2 mm, C420287

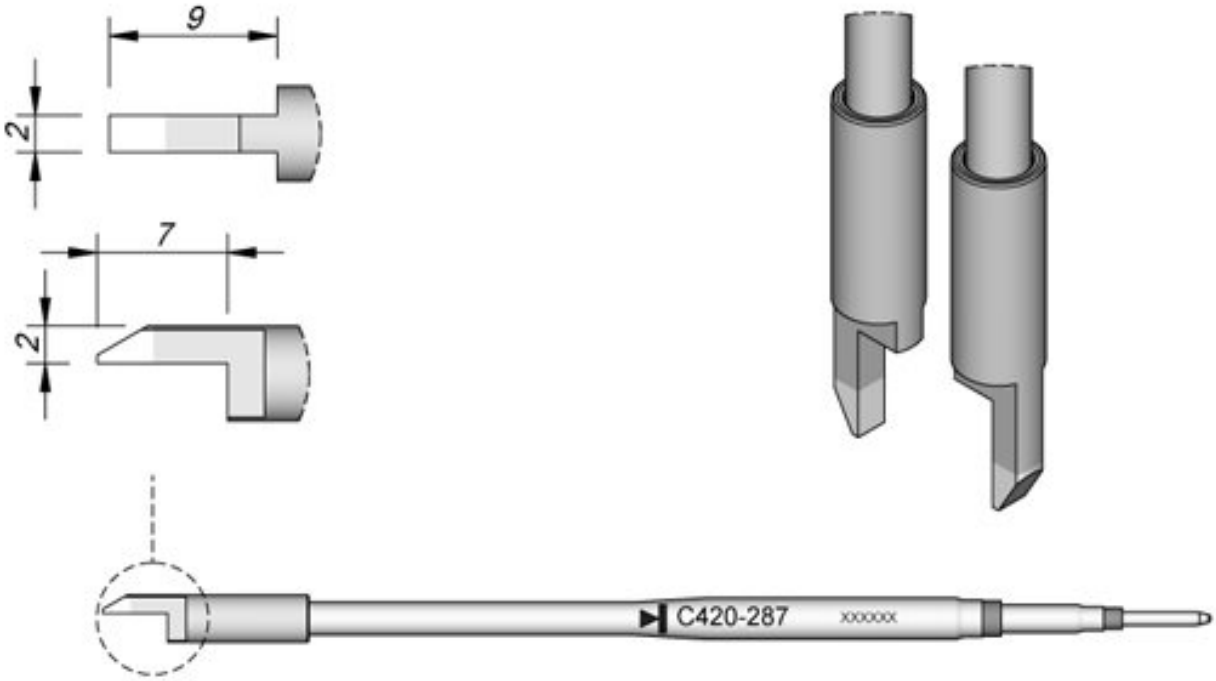

The C420 tip series are suitable for soldering and desoldering SMD components. The soldering tips are compatible with the thermo tweezers HT420 and are sold separately.

Item no.	**WL41680**
Model	C420-287
Manufacturer	JBC
Manufacturer article no.	C420287
GPSR manufacturer data	JBC Soldering SL Ramón y Cajal 3 ES-08750 Molins De Rei www.jbctools.com
Length with packaging	170 mm
Width with packaging	28 mm
Height with packaging	20 mm
Sales unit	1 piece
Content unit	1 piece

Product series	C420
Tip series	C420
Incl. integrated heating	yes
Tip applications	for chip
Tip shape	special form
Tip alignment	straight
Matching handpiece	AT420, HT420
ESD compliant	no