NRV12 Hot air nozzle with vacuum, D: 12 mm

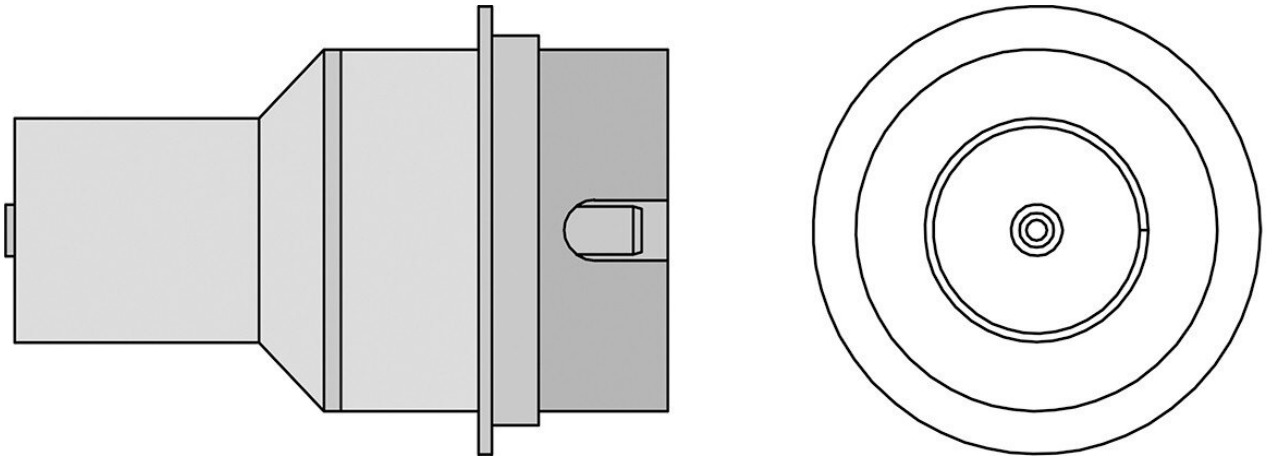

has an integrated preheating plate for preheating the components by means of contact heat. Around the plate there are air outlet slots for the hot air of approx. 1 mm width.

Item no.	**WL40593**
Model	NRV12
Manufacturer	WELLER
Manufacturer article no.	T0058750774N
GPSR manufacturer data	WELLER Tools GmbH Carl-Benz-Strasse 2 DE-74354 Besigheim www.weller-tools.com
Sales unit	1 piece
Content unit	1 piece
Product series	NRV hot air nozzles
Soldering tip diameter	12 mm
Tip shape	hot air nozzle
Tip alignment	straight
Matching handpiece	HAP 2, HAP 3, HAP 3000