Soldering tip for T210-A / T210-NA, fillet, C210029

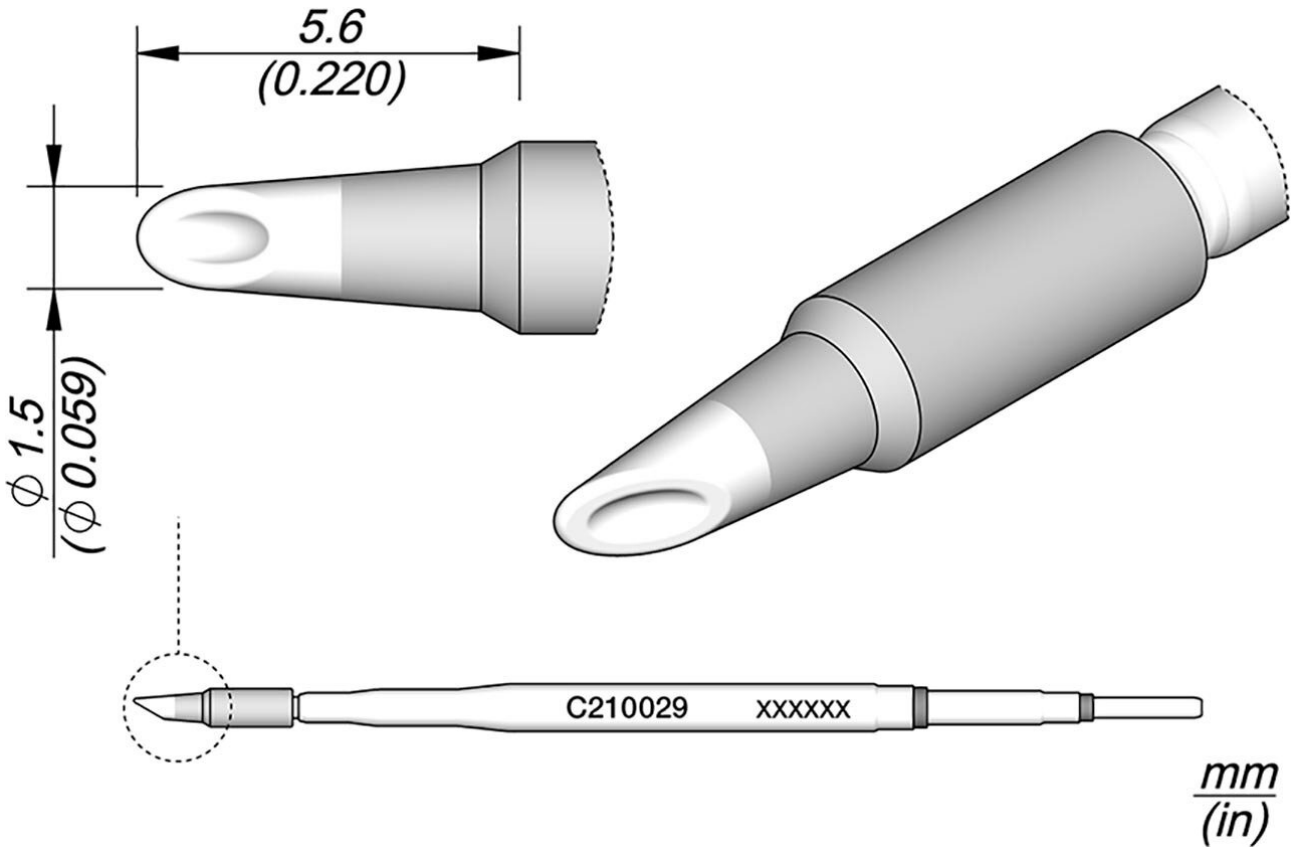

suitable for SMD, working under microscope

Item no.	**WL39003**
Model	C210-029
Manufacturer	JBC
Manufacturer article no.	C210029
GPSR manufacturer data	JBC Soldering SL Ramón y Cajal 3 ES-08750 Molins De Rei www.jbctools.com
Length with packaging	110 mm
Width with packaging	12 mm
Height with packaging	12 mm
Sales unit	1 piece

Content unit	1 piece
Product series	C210
Tip series	C210
Incl. integrated heating	yes
Tip length	5.6 mm
Total length of the soldering tip	80 mm
Soldering tip diameter	1.5 mm
Tip shape	hollow profile
Tip alignment	sloped
Matching handpiece	T210
Matching accessories	DC-A - Cartridge dispenser case C105C210
ESD compliant	no