Table frame Sintro, 930x750mm, 200 kg load capacity

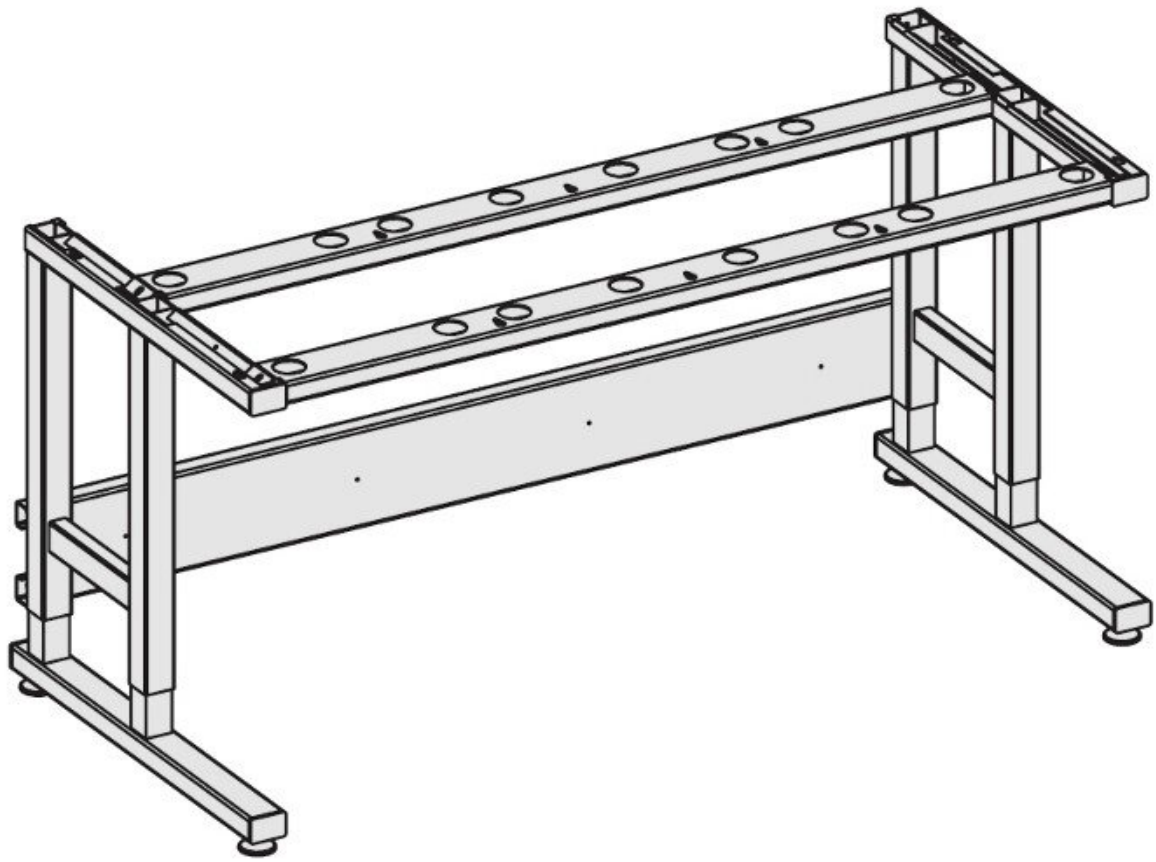

The Karl table frame is characterized by its stable construction and high load-bearing capacity.
- Height adjustment with clamping screws
- stable steel construction
- Height adjustment from 740 - 1040 mm
- Height compensation elements in the foot section
- Work surface can be loaded with 200 kg uniform surface load

Item no.	**WL38688**
Model	25.003.70
Model line	Sintro
Manufacturer	KARL
Manufacturer article no.	25.003.70

GPSR manufacturer data	Andreas KARL GmbH & Co. KG Hauptstraße 26 DE-85777 Fahrenzhausen www.karl.eu
Width	930 mm
Height	740 mm
Depth	750 mm
Sales unit	1 piece
Content unit	1 piece
Manufacturer colour information	light gray (RAL 7035)
Type of height adjustment	clamping screws
Height adjustable	740 – 1040 mm
Material (frame)	powder-coated steel
Material (table top)	Hard laminate
Incl. earthing point	no
Load capacity	200 kg
ESD compliant	no