Soldering tip for i-Tool, straight, pencil tip, 1mm, 0102PDLF10

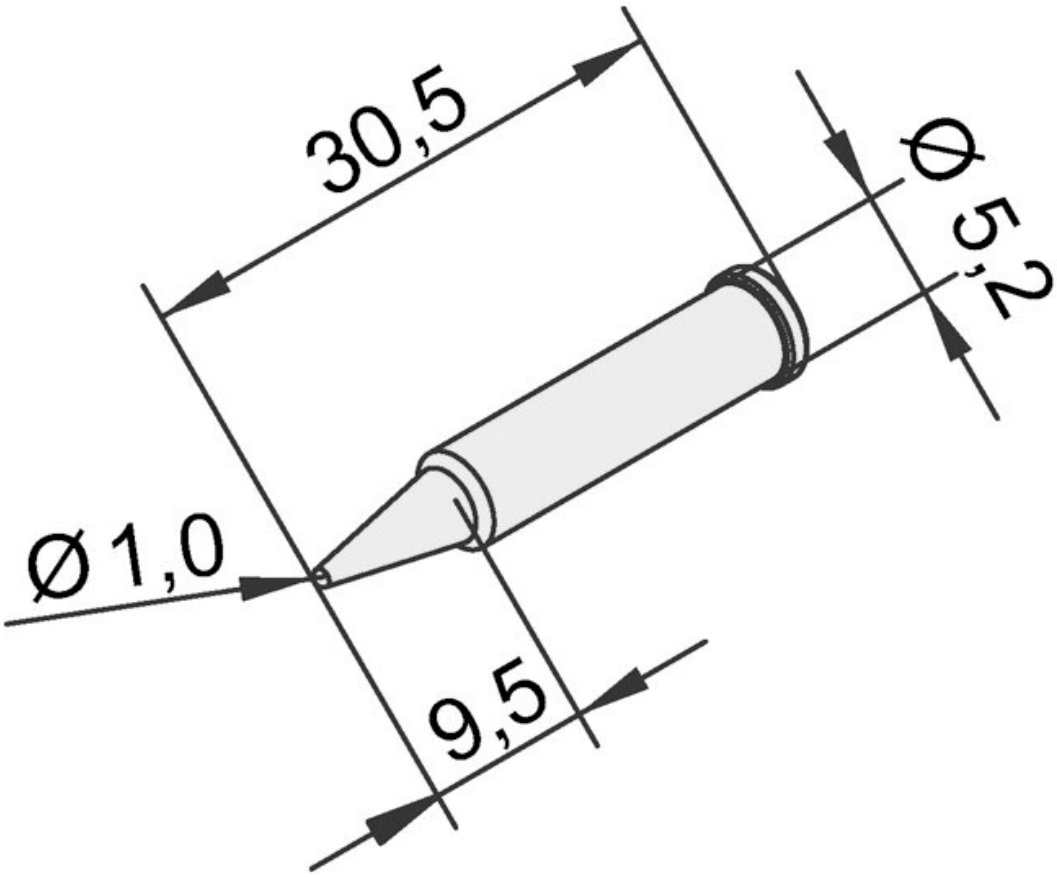

• Suitable for the soldering iron i-Tool (i-Tool) of the soldering station i-CON in the versions 0IC1000A, 0IC1100A, 0IC1100V, 0IC2000A, 0IC2000AIT, 0IC2000AC and 0IC2000AXT, 0IC2200V, 0IC2200VC, 0IC2200VIT, 0IC2200VXT, 0IC2100VC, 0IC2100VXT
• ERSA i-Tip continuous soldering tip series with ERSADUR-LF coating for the i-TOOL

Item no.	**WL36144**
Model	102PD-LF10
Manufacturer	ERSA
Manufacturer article no.	0102PDLF10/SB
GPSR manufacturer data	ERSA GmbH Leonhard-Karl-Strasse 24 DE-97877 Wertheim www.ersa.de

Length	31 mm
Length with packaging	100 mm
Width with packaging	60 mm
Height with packaging	5 mm
Sales unit	1 piece
Content unit	1 piece
Total length	30.5 mm
Product series	102
RoHS compliant	yes
Tip series	102
Inner diameter (shaft)	3.5 mm
Outer diameter (shaft)	5.2 mm
Soldering tip diameter	1 mm
Tip shape	pencil pointed
Tip alignment	straight
Coating of the soldering tip	permanent soldering tip
Matching handpiece	i-TOOL, i-TOOL NANO, i-TOOL PICO
ESD compliant	no