Soldering tip for i-Tool, straight, chisel-shaped, 1.8 mm, extended, 0102CDLF18L

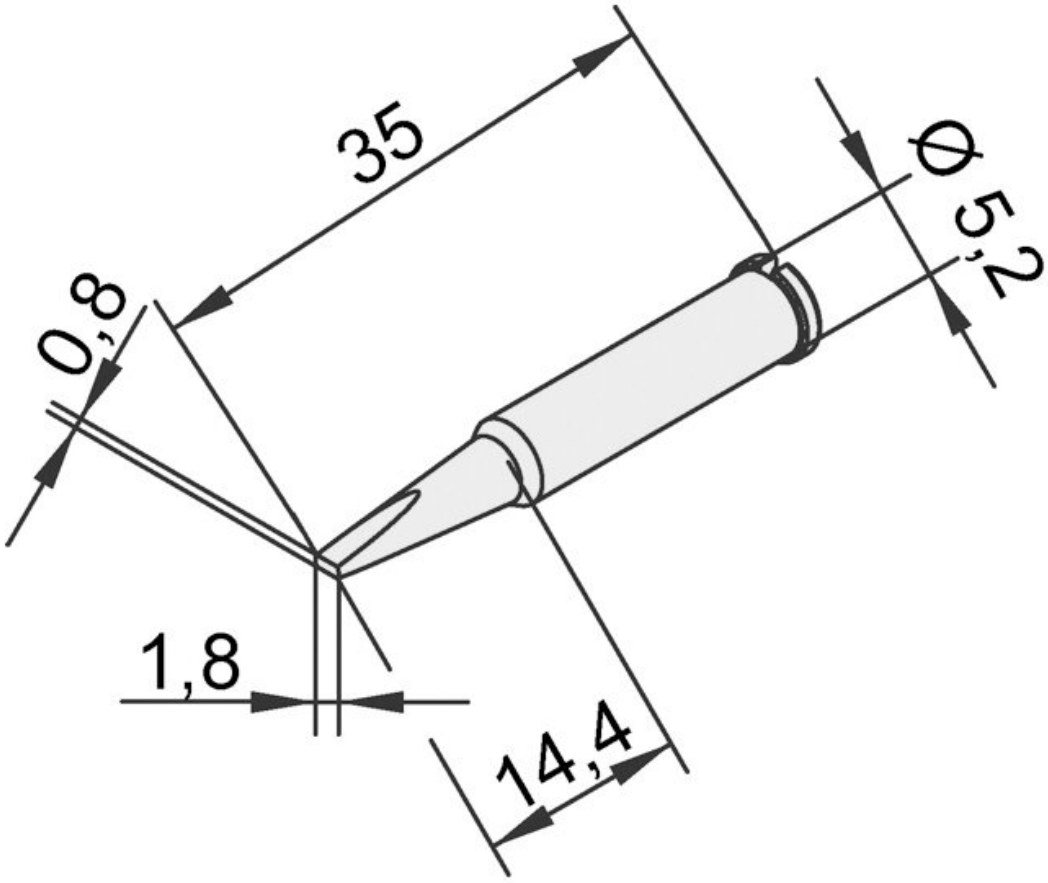

• Suitable for the soldering iron i-Tool (i-Tool) of the soldering station i-CON in the versions 0IC1000A, 0IC1100A, 0IC1100V, 0IC2000A, 0IC2000AIT, 0IC2000AC and 0IC2000AXT, 0IC2200V, 0IC2200VC, 0IC2200VIT, 0IC2200VXT, 0IC2100VC, 0IC2100VXT
• ERSA i-Tip continuous soldering tip series with ERSADUR-LF coating for the i-TOOL

Item no.	**WL36130**
Model	102CD-LF18L
Manufacturer	ERSA
Manufacturer article no.	0102CDLF18L/SB
GPSR manufacturer data	ERSA GmbH Leonhard-Karl-Strasse 24 DE-97877 Wertheim

	www.ersa.de
Length	35 mm
Length with packaging	100 mm
Width with packaging	70 mm
Height with packaging	5 mm
Sales unit	1 piece
Content unit	1 piece
Total length	35 mm
Product series	102
RoHS compliant	yes
Tip series	102
Inner diameter (shaft)	3.5 mm
Outer diameter (shaft)	5.2 mm
Soldering tip diameter	1.8 mm
Tip shape	chisel-shaped
Tip alignment	straight
Coating of the soldering tip	permanent soldering tip
Matching handpiece	i-TOOL, i-TOOL NANO, i-TOOL PICO
ESD compliant	no