Soldering tip for Multitip C15 / Tip 260, straight, chisel tip, 2.6 mm, 0162KD

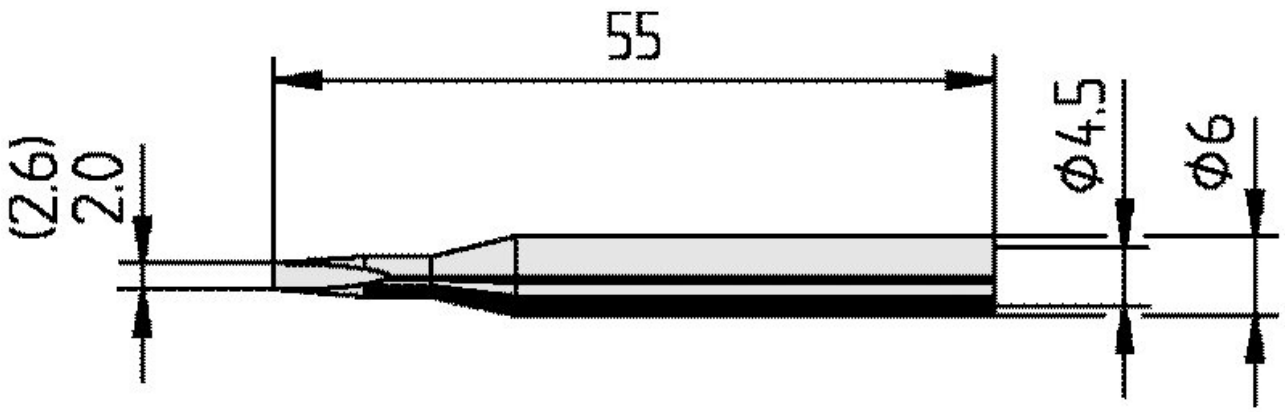

- Continuous soldering tip for ERSA Tip 260 and Multitip C15
- Packaging unit with 1 continuous soldering tip in a self-service package

Item no.	**WL36062**
Model	162KD
Manufacturer	ERSA
Manufacturer article no.	0162KD/SB
GPSR manufacturer data	ERSA GmbH Leonhard-Karl-Strasse 24 DE-97877 Wertheim www.ersa.de
Length	55 mm
Length with packaging	88 mm
Width with packaging	62 mm
Height with packaging	12 mm
Sales unit	1 piece
Content unit	1 piece
Total length	55 mm
Product series	162
RoHS compliant	yes
Tip series	162

Inner diameter (shaft)	4.5 mm
Outer diameter (shaft)	6 mm
Soldering tip diameter	2.6 mm
Tip shape	chisel-shaped
Tip alignment	straight
Coating of the soldering tip	permanent soldering tip
Matching handpiece	MULTITIP 25, SL 870, TIP 260
ESD compliant	no