Soldering tip straight, extended, pencil tip, 0.4 mm, 0842UDLF

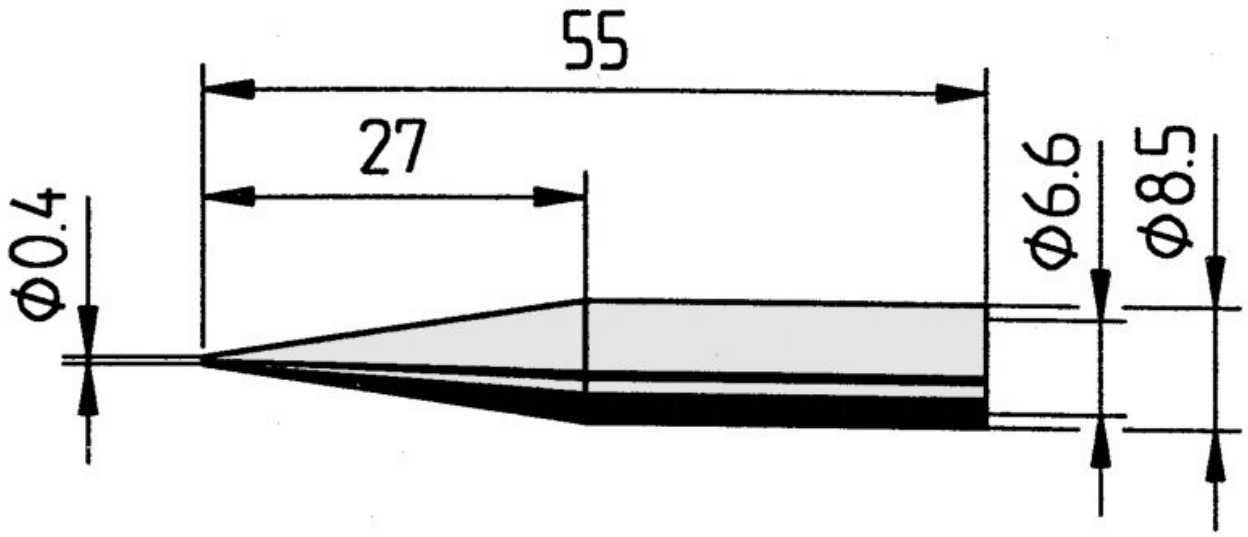

• Continuous soldering tip, straight, extended, pencil tip, 0.4 mm diameter, with ERSADUR-LF coating (lead-free soldering) with increased service life for increased heat demand.
• suitable for soldering stations ANANLOG 60, ANANLOG 60 A, ANANLOG 80, ANANLOG 80 A, DIGITAL 80 A, DIGITAL 2000 A version with soldering iron Power tool, Multi-Pro, Multi-Sprint, Multi-TC and PTC 70, RDS 80, MICRO-CON 60 iA with soldering iron Power tool, TWIN 80 A with soldering iron Ergo tool

Item no.	**WL36051**
Model	842UD-LF
Manufacturer	ERSA
Manufacturer article no.	0842UDLF/SB
GPSR manufacturer data	ERSA GmbH Leonhard-Karl-Strasse 24 DE-97877 Wertheim www.ersa.de
Length	55 mm
Length with packaging	90 mm
Width with packaging	60 mm
Height with packaging	10 mm
Sales unit	1 piece

Content unit	1 piece
Total length	55 mm
Product series	842
RoHS compliant	yes
Tip series	842
Inner diameter (shaft)	6.6 mm
Outer diameter (shaft)	8.5 mm
Soldering tip diameter	0.4 mm
Tip shape	pencil pointed
Tip alignment	straight
Coating of the soldering tip	permanent soldering tip
Matching handpiece	BASIC TOOL, ERGO TOOL, MULTI-PRO, MULTI-SPRINT, MULTI-TC, POWER-TOOL, PTC 70
ESD compliant	no