Soldering tip for T210-A / T210-NA, chisel-shaped, C210024

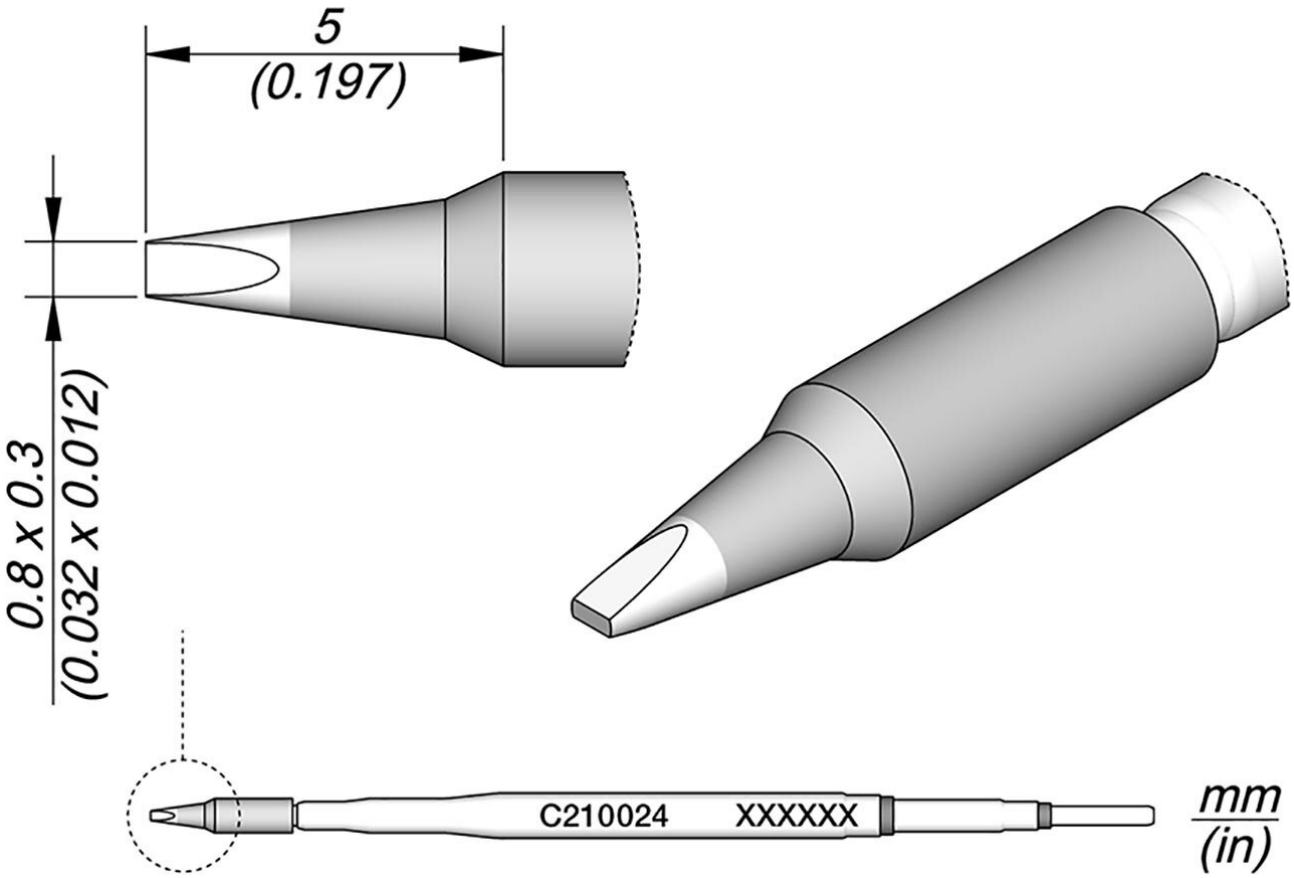

Item no.	WL35099
Model	C210-024
Manufacturer	JBC
Manufacturer article no.	C210024
GPSR manufacturer data	JBC Soldering SL Ramón y Cajal 3 ES-08750 Molins De Rei www.jbctools.com
Length with packaging	110 mm
Width with packaging	12 mm
Height with packaging	12 mm
Sales unit	1 piece
Content unit	1 piece
Product series	C210

Tip series	C210
Incl. integrated heating	yes
Tip dimensions	0,8 x 0,3 mm
Tip length	5 mm
Total length of the soldering tip	80 mm
Tip shape	chisel-shaped
Tip alignment	straight
Matching handpiece	T210
Matching accessories	DC-A - Cartridge dispenser case C105C210
ESD compliant	no