Desoldering tip set, angled chisel-shaped 1.5 mm, 0462MDLF015

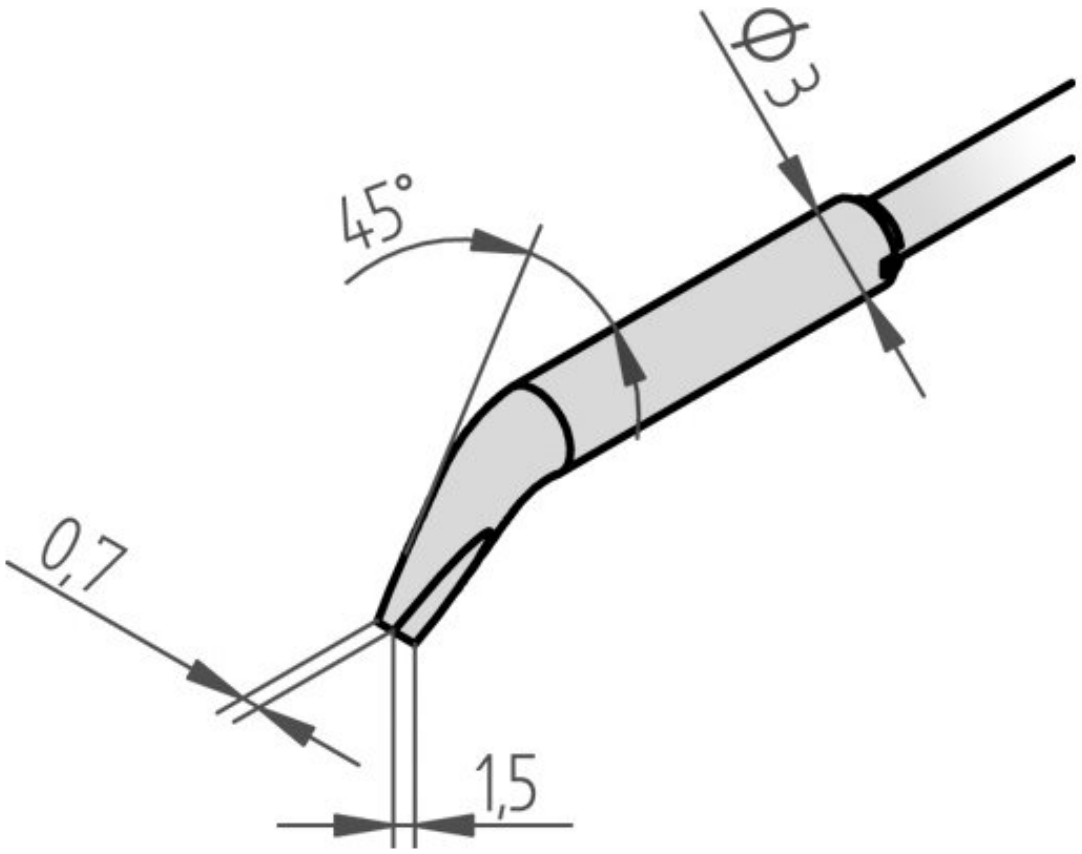

• 1.5 mm wide
• incl. radiator
• Suitable for the i-CON VARIO 2 and i-CON Vario 4 statios, as well as for the Chip-Tool Vario (0460MDJ) desoldering tweezers

Item no.	**WL29118**
Model	462MDLF015
Manufacturer	ERSA
Manufacturer article no.	0462MDLF015/SB
GPSR manufacturer data	ERSA GmbH Leonhard-Karl-Strasse 24 DE-97877 Wertheim

	www.ersa.de
Sales unit	1 pair
Content unit	1 pair
Product series	462
Tip series	462
Outer diameter (shaft)	3 mm
Tip dimensions	0,7 x 1,5 mm
Tip shape	chisel-shaped
Tip alignment	bent
Matching handpiece	CHIP TOOL VARIO
ESD compliant	no