Special soldering tips, for soldering iron T245, C245748

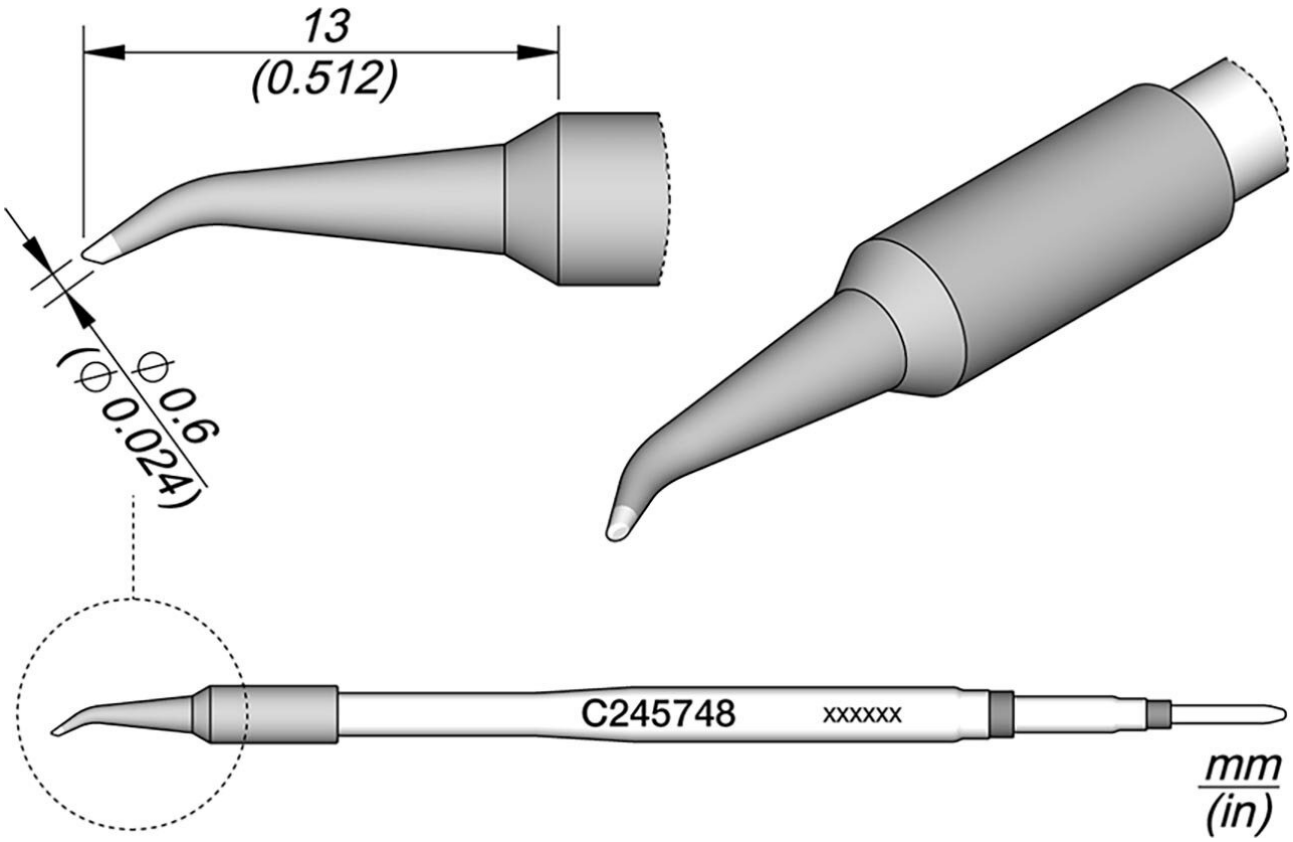

Item no.	**WL28370**
Model	C245-748
Manufacturer	JBC
Manufacturer article no.	C245748
GPSR manufacturer data	JBC Soldering SL Ramón y Cajal 3 ES-08750 Molins De Rei www.jbctools.com
Length with packaging	110 mm
Width with packaging	12 mm
Height with packaging	12 mm
Sales unit	1 piece
Content unit	1 piece
Product series	C245

Tip series	C245
Incl. integrated heating	yes
Tip length	13 mm
Soldering tip diameter	0.6 mm
Tip shape	special form
Tip alignment	bent
Matching handpiece	T245
ESD compliant	no