Soldering tip for T210-A / T210-NA, blade-shaped, C210018

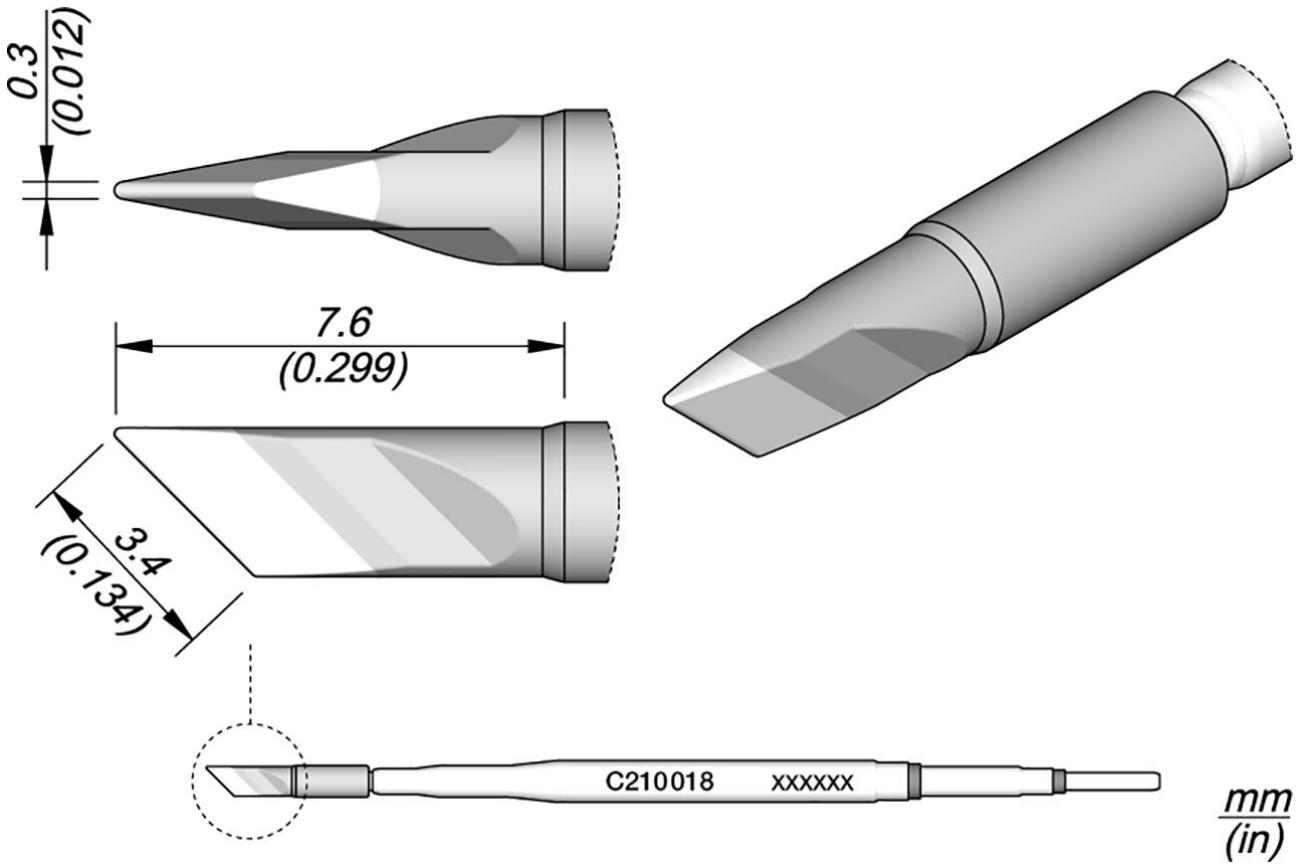

The JBC C210018 soldering tip is a high-precision blade shape with a width of 3.4 mm and a thickness of 0.3 mm. It has been specially developed for demanding soldering work with medium power requirements and is ideal for processing SMD components, conventional components and for working under a microscope. With a length of 7.6 mm, it enables precise and controlled heat transfer, which is particularly advantageous for delicate solder joints.
The C210018 soldering tip is compatible with the T210 precision soldering irons as well as the B-100 and B-500 handpieces of the B-IRON series. Thanks to JBC's exclusive heating system, it offers instant heat-up time, excellent heat transfer and high durability. The soldering tip is characterized by a five times longer service life compared to other brands, making it a cost-effective choice for professional applications.
Connection 3-pole

Item no.	**WL26247**
Model	C210-018

Manufacturer	JBC
Manufacturer article no.	C210018
GPSR manufacturer data	JBC Soldering SL Ramón y Cajal 3 ES-08750 Molins De Rei www.jbctools.com
Length with packaging	110 mm
Width with packaging	12 mm
Height with packaging	12 mm
Sales unit	1 piece
Content unit	1 piece
Product series	C210
Tip series	C210
Incl. integrated heating	yes
Tip dimensions	3,4 x 0,3 mm
Tip length	7.6 mm
Total length of the soldering tip	100 mm
Tip shape	blade-shaped
Tip alignment	sloped
Matching handpiece	T210
Matching accessories	DC-A - Cartridge dispenser case C105C210
Temperature stability °C	± 3 %
ESD compliant	no