Special soldering tips, for soldering iron T245, C245118

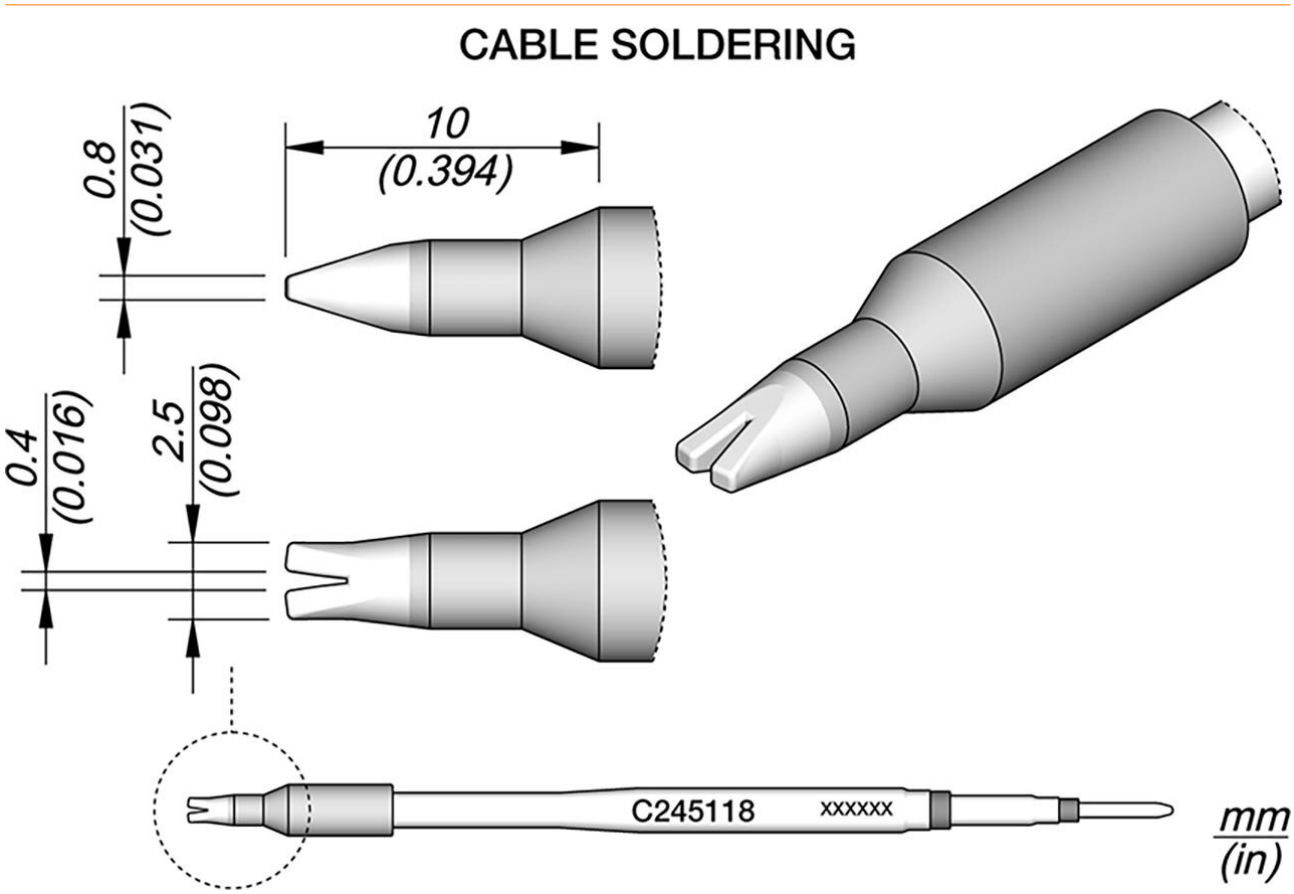

- Gap = 0.4 mm
- solder to cable

Item no.	WL25540
Model	C245-118
Manufacturer	JBC
Manufacturer article no.	C245118
GPSR manufacturer data	JBC Soldering SL Ramón y Cajal 3 ES-08750 Molins De Rei www.jbctools.com
Length with packaging	110 mm
Width with packaging	12 mm
Height with packaging	12 mm

Sales unit	1 piece
Content unit	1 piece
Product series	C245
Tip series	C245
Incl. integrated heating	yes
Tip dimensions	2,5 x 0,8 mm
Tip length	10 mm
Tip shape	special form
Tip alignment	sloped
Matching handpiece	T245
ESD compliant	no