# Soldering tip straight, chisel-shaped, 1.0 mm, 0212CDLF

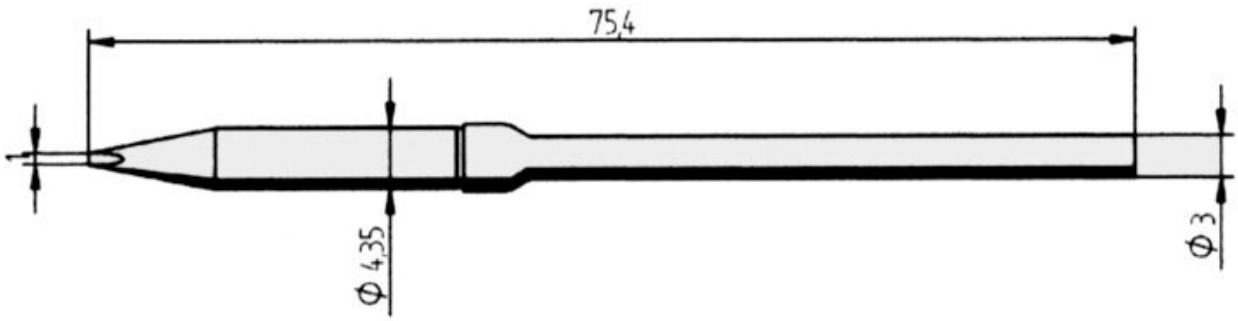


• Continuous soldering tip with ERSADUR-LF coating with increased service life
• for soldering stations TWIN 40 A/AS, SMT UNIT 60 A/AS (soldering iron Micro tool), Rework 80, SMD 8000 (soldering iron CTA 20), MICRO-CON 60 iA (soldering iron Micro tool),
TWIN 80 A (Micro tool soldering iron), ANALOG 20 (Micro tool soldering iron) and DIGITAL 2000 A (Micro tool soldering iron)

| **Item no.** | **WL23747** |
|---|---|
| Model | 212CD-LF |
| Manufacturer | ERSA |
| Manufacturer article no. | 0212CDLF/SB |
| GPSR manufacturer data | ERSA GmbH<br>Leonhard-Karl-Strasse 24<br>DE-97877 Wertheim<br>www.ersa.de |
| Length | 74 mm |
| Length with packaging | 100 mm |
| Width with packaging | 60 mm |
| Height with packaging | 5 mm |
| Sales unit | 1 piece |
| Content unit | 1 piece |
| Total length | 74 mm |
| Product series | 212 |

| | |
|---|---|
| RoHS compliant | yes |
| Tip series | 212 |
| Inner diameter (shaft) | 1 mm |
| Outer diameter (shaft) | 4 mm |
| Soldering tip diameter | 1 mm |
| Tip shape | chisel-shaped |
| Tip alignment | straight |
| Coating of the soldering tip | permanent soldering tip |
| Matching handpiece | MICRO-TOOL |
| ESD compliant | no |