ND05 Hot air dual nozzle, 10.7 x 10.7 mm, 2 sides heated

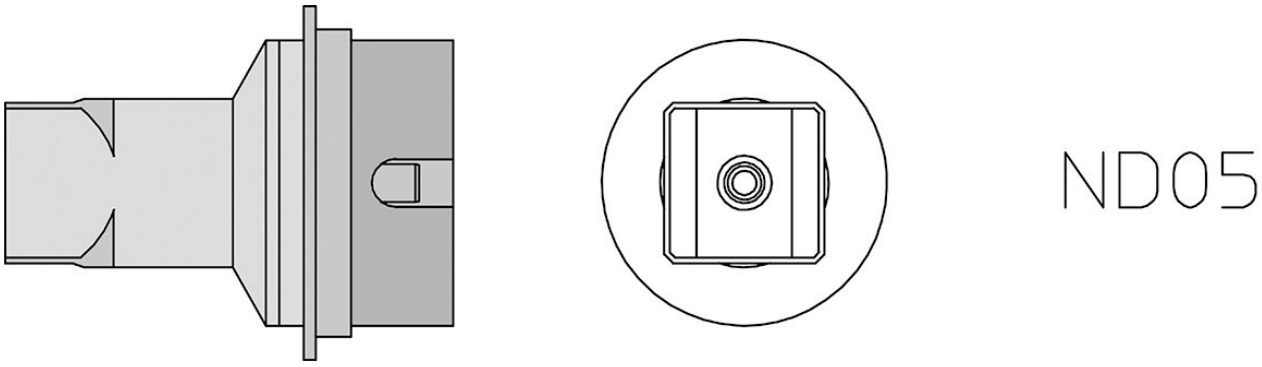

- with preheating plate 10 x 10.7 mm
- 2 sides heated

Item no.	**WL16659**
Model	ND-05
Manufacturer	WELLER
Manufacturer article no.	T0058736843N
GPSR manufacturer data	WELLER Tools GmbH Carl-Benz-Strasse 2 DE-74354 Besigheim www.weller-tools.com
Sales unit	1 piece
Content unit	1 piece
Product series	ND hot air dual nozzle
Tip length	10 mm
Tip length in inches	0.421 in
Tip width	10.7 mm
Tip width in inches	0.422 in
Tip shape	hot air nozzle
Tip alignment	straight
Matching handpiece	HAP 2, HAP 3, HAP 3000